FYH UCFLX07 bearing units

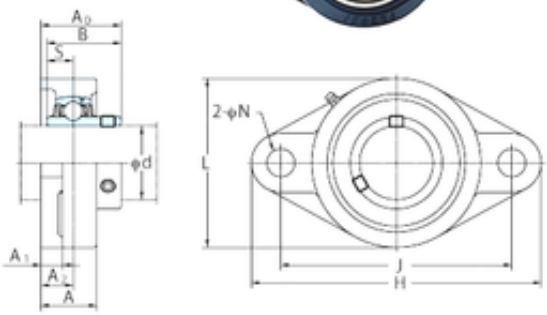

UCFLX07 Bearing 2D drawings and 3D CAD models

Bearing No. UCFLX07

Bore Diameter	35 mm
d	35 mm
A0	51,2 mm
A	38 mm
A1	14 mm
B	49,2 mm
H	171 mm
J	144 mm
L	105 mm
N	16 mm
S	19 mm
Bolt (G)	14
Bolt (G)	M14
A2	21 mm
Weight	1,9 Kg
Basic static load rating (C0)	29,1 kN